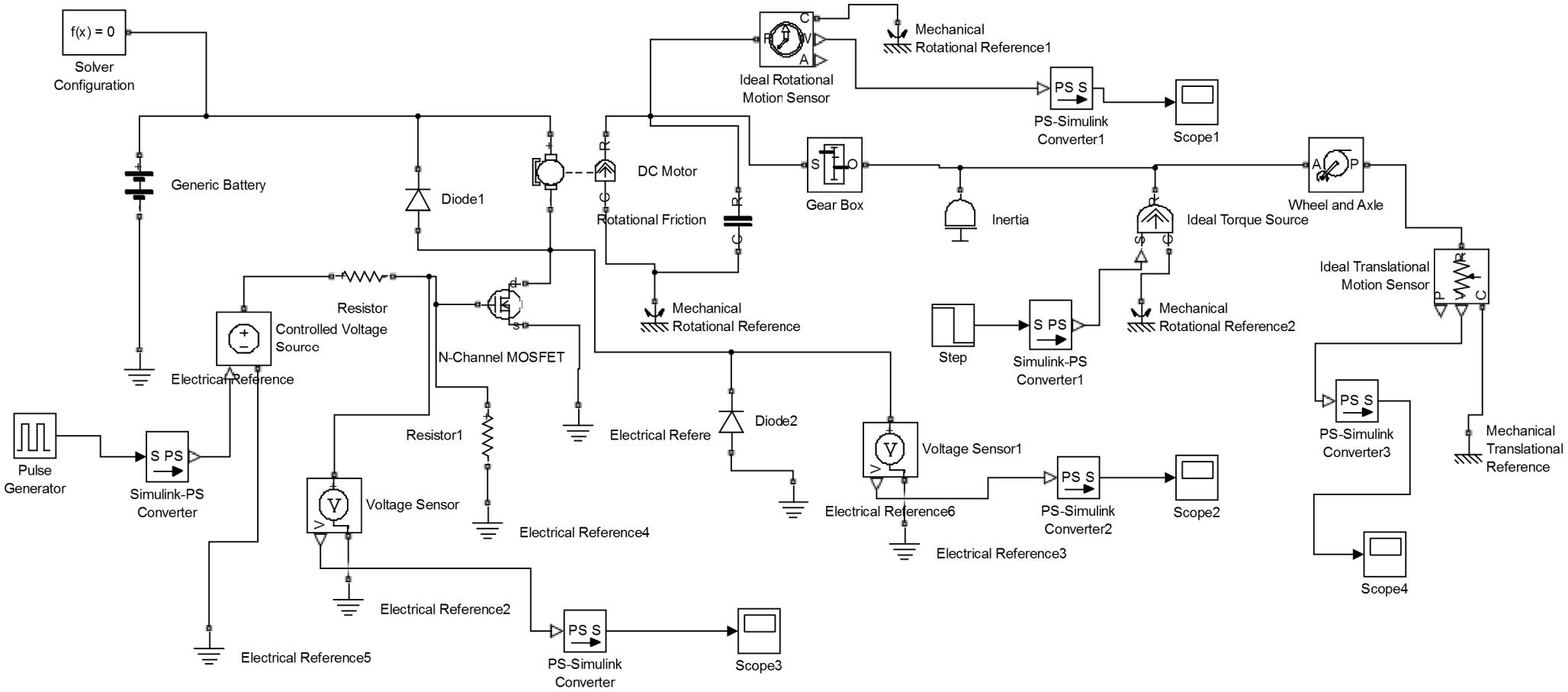
f(x) = 0
Solver Configuration
Generic Battery
Diode1
DC Motor
Rotational Friction
Ideal Rotational Motion Sensor
Mechanical Rotational Reference1
PS-Simulink Converter1
Scope1
Gear Box
Inertia
Ideal Torque Source
Wheel and Axle
Ideal Translational Motion Sensor
Resistor
Controlled Voltage Source
Electrical Reference
N-Channel MOSFET
Mechanical Rotational Reference
Step
Simulink-PS Converter1
Mechanical Rotational Reference2
PS-Simulink Converter3
Mechanical Translational Reference
Pulse Generator
Simulink-PS Converter
Resistor1
Electrical Refere
Diode2
Voltage Sensor1
Voltage Sensor
Electrical Reference4
Electrical Reference6
PS-Simulink Converter2
Scope2
Electrical Reference3
Scope4
Electrical Reference2
Electrical Reference5
PS-Simulink Converter
Scope3